Biella



Single-sided modular bike rack composed of a steel structure made of two vertical supports and a horizontal aluminum bar, equipped with aluminum supports for bike handlebars, positioned at two different heights. Each parking spot is equipped with a steel cable coated with PVC that allows to secure the frame of the bike.

Variant code:	0031574
Size and weight:	Width 2810mm Length 600mm Height 1255mm Weight 31kg
Materials:	Steel treated with protective coating and powder coating

Finishes:	Polyester powder coated steel in wrinkled finish Color: to be chosen from Metalco standard colour range
Fixing:	Pre-drilled for anchors
Accessories:	Kit cavi inox per portabiciclette monofacciale (6 pz)

Technical drawing:

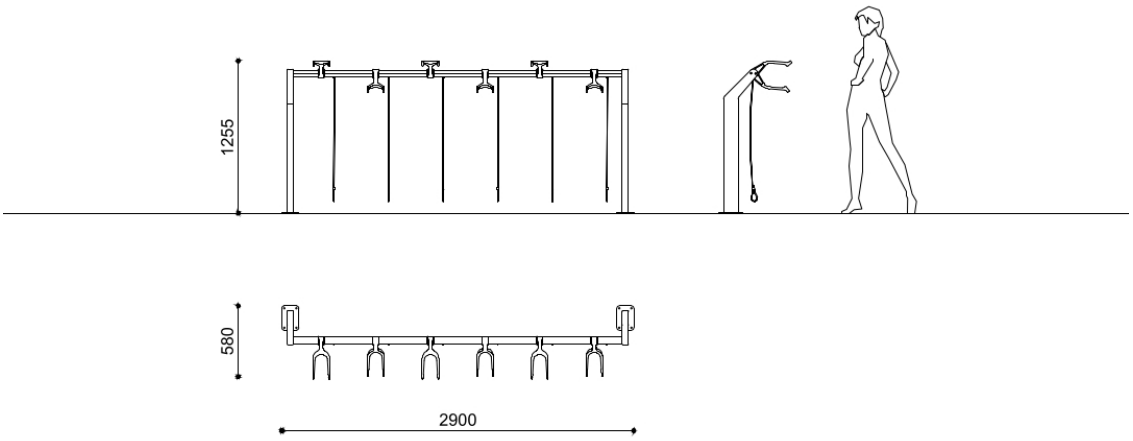

metalco.it
info@metalco.it

metalco

POWDER COATED STEEL - POWDER COATED ALUMINUM

For every steel product and component, we choose the most suitable raw materials and treatments based on our production cycle and the needs of each design.

Our steel treatments include hot-dip galvanization, cold galvanizing, Sendzimir galvanization, cataphoresis and primer coating.

For our aluminum products and components, we use aluminum in sheet or in extrusion or in casting.

Then we powder coat steel, stainless steel, and aluminum with polyester powder, in accordance with EN ISO 12944-2.

We offer a wide range of standard RAL colors with wrinkled finish with different levels of texture. Only when customization through stickers, pad printing or serigraphy is provided, for technical reasons, their finish will be smooth matte or smooth glossy, depending on the technical feasibility.

We also offer the exclusive SABLE' colours, with a peculiar metallic wrinkled texture.

Upon request, different treatments and customizations are available, such as powder coating with non-standard RAL colors, and/or with smooth matte and smooth glossy finishes, and/or anti-graffiti treatment.

If required, the powder coating process can be certified Quality Steel.

RAL



SABLÈ



The mentioned RAL and SABLÈ colours should be considered only illustrative.

metalco.it
info@metalco.it

metalco